M2 Antenna Systems, Inc.
Model No: FG30XP-8

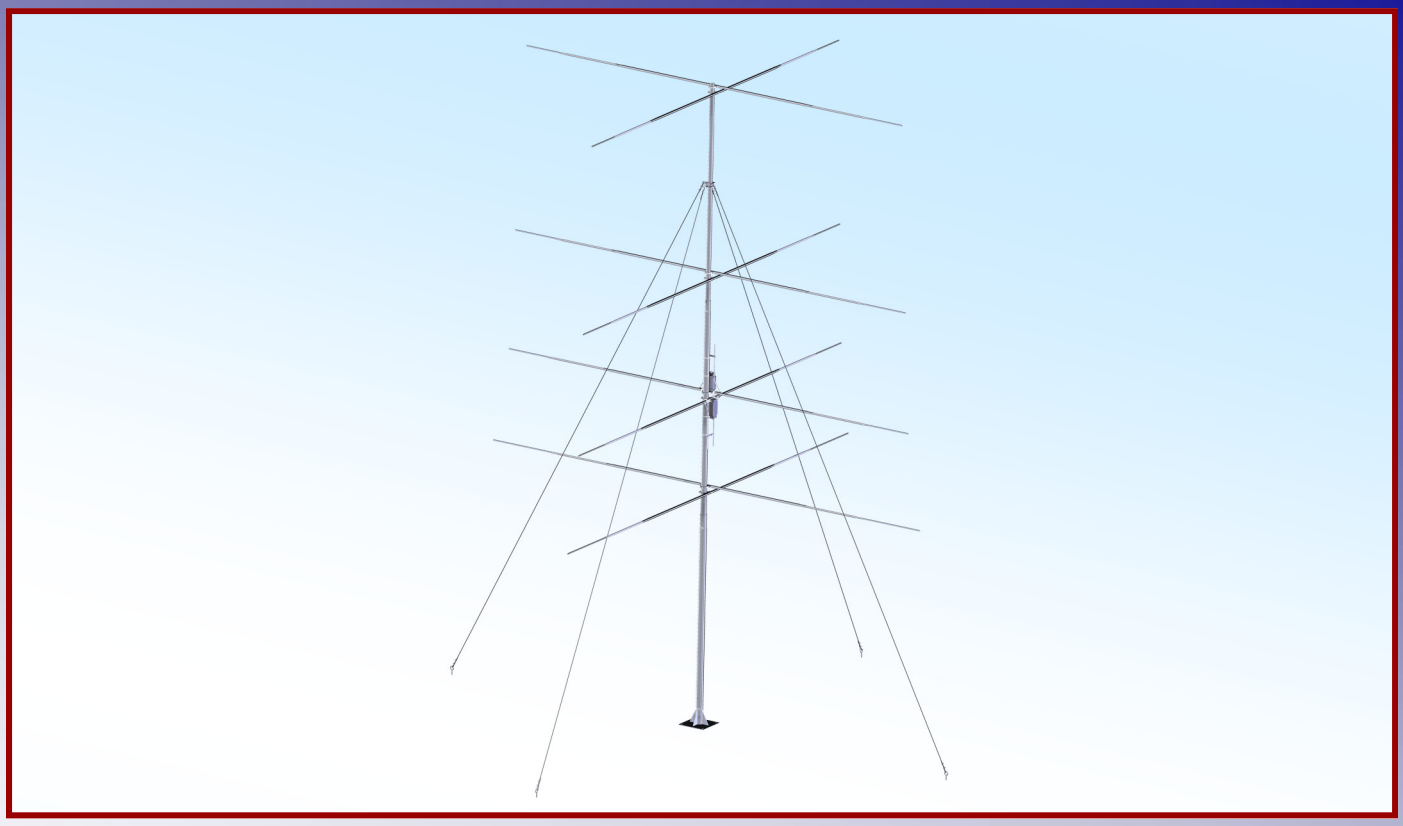

SPECIFICATIONS:

Model	FG30XP-8
Frequency Range	29.51MHz to 30.35MHz
*Gain	9.1 dBi
Front to back	20 dB
Beamwidth	E=60°
Feed type	Hair pin match
Feed Impedance	50 Ohms Unbalanced
VSWR	1.3:1 typ. 2:1 max
Input Connector	N Female
Power Handling	5 kW Higher Opt.
Boom Length / Dia	22'-1"/ 3.0" To 2"
Element Length / Dia.	17.25 Ft. / 1" To 1/2"
Turning Radius:	Rear Mount
Mast Size	2" to 3 " Nom.
Wind area / Survival	6.5 Sq. Ft.. / 100 MPH
Weight / Ship Wt.	63 Lbs. / 73 Lbs.

***Subtract 2.14 from dBi for dBd**

FEATURES:

The FG30XP-8 is a rugged rear mount 8 element cross polarity Yagi type antenna with 4 elements on each plane that was specifically designed for one of our elite customers. This rugged design was meant for high power short term operation. The FG30XP-8 features machined element to boom clamps, quad guy wire system and high power 5 KW continuous operation balun. The guy support uses aramid fiber guy wire material and rugged guy wire attachment points. If properly maintained the FG30XP-8 could withstand years of operation. When looking for a simple Yagi or a antenna with complex requirements and or strange application, look no further than M2 Antenna Systems INC.

M2 Antenna Systems, Inc. 4402 N. Selland Ave. Fresno, CA 93722
Tel: (559) 432-8873 Fax: (559) 432-3059 Web: www.m2inc.com
©2020 M2 Antenna Systems Incorporated

2/11/2020
REV A

FG30XP-8 ASSEMBLY NOTES

General note: Always use Penetrox paste on all aluminum to aluminum connection as this will insure a long term secure RF connection. It is also recommended to use a small amount of the Penetrox paste or lubricant on all stainless steel hardware to avoid galling. It would be handy to have 4 bucks or saw houses available during some of the assembly process.

The FG30XP-8 comes partially assembled from the factory. There will be a main boom assembly with the element to boom clamps (ring clamps) and guy attachment points pre-assembled. The basic assembly steps are to add the elements to the boom assembly, add the balun and feed components to the antenna, add the over head guy supports to the boom and install to the tower. Below are details in specific areas of concern.

1. Inspecting the boom assembly

With the boom assembly sitting on a raised surface or saw horses, inspect the boom assembly for any damage during shipping and repair as needed. Note: the boom is marked with labels that depict the center guy a position, and rear of the boom along with the BTM plate position. Note the different sizes of element to boom clamps (ring clamps).

2. Element installation

The complete element set should be wrapped with stretch wrap. Unpack the elements, inspecting during removal. Each element will be labeled denoting the element. The **Reflector** is the most rear element, then moving forward would be the **Driven Element**, next would be the **Director 1** and the most forward element is **Director 2**. The matching element simply slides onto the .875 x .058 x 30” sleeve and bolts down to the element clamp, except for the driven element. Do not install the driven element at this point. Note: there are different hole patterns in the 7/8 x 30 tubes, the narrow hole pattern fits the 2” ring clamp and the wider hole pattern fits the 2.5 ring clamp. See the element mounting detail for hardware sizes.

3. Driven element and balun assembly

Start by assembling the balun assembly. Refer to the balun assembly detail, add the balun mounting bracket and hardware, do not over tighten. Do not install the balun straps at this point. Refer to the driven element detail for the appropriate hardware and start by mounting the fiber glass insulator and balun assembly to the ring clamp. Slide on the disc insulators onto each end of the fiber glass rod and push them firm up against the ring clamp. Add each driven element half assembly to each side of the fiber glass rod insulator. Insert the 1/4” hardware from the underside up thru the fiber glass. Add the 3/8 clamp blocks and non-locking 1/4 nut, creating a stud. Keep loose at this point. assemble the shorting bar, hair pin spacer and hose clamp to the boom of the antenna at the approximate shorting bar position. Add the hair pin tubes as shown in the detail and tighten the bolts creating a firm stud. Add the balun straps to each side of the balun and studs. Be sure to use Penetrox on all connections and add the 1/4 locking nut. Set the shorting bar to the position noted on the Antenna dimension sheet.

4. Sighting the elements

Once all the elements are installed, sighting and aligning of the elements can performed. Although, all the elements were sighted and aligned at the factory some small adjustments may be needed.

Sighting the element: Stand about 20 ft. behind the antenna, position yourself centered on the antenna and change your height as to reference one element to another. This will make it clear what element is out of alignment. Adjust as needed, continue this method working from the rear to the front. Below is a simulation of viewing or sighting the elements. In this simulation the elements are straight , in actual practice the elements will have some droop.

FG30XP-8 ASSEMBLY NOTES

5. Guy cables preassembly.

The upper guy attachment points have been preassembled at the factory. Refer to the “UPPER GUY WIRE DETAIL” Use the appropriate hardware and tighten. Attach the ends of the Phillystran to the front guy points using a thimble and 2 wire clips, bend the thimble to get it thru the guy attachment points then bend back into shape. Loosen the wire clip as to let the line slide thru, then slide onto the Phillystran and loop the Phillystran thru the hole in the guy points and back onto its self with about 3” tail, slip the short end of line thru the wire clip and pull the wire clip close to the thimble and tighten to make sure the line stays in the thimble to protect the Phillystran from being damaged, now tighten the outer wire clip. Use this same technique on the other guy points. The lower guys have been supplied with lag/eye bolts to be screwed into the deck of the boat or tied to another sturdy point.

8. Inspection.

Check all dimensions one last time. Check all hardware for tightness and confirm all aluminum to aluminum connections have Penetrox paste.

FG30XP-8 BOM AS SHIPPED IN ASSEMBLIES

DESCRIPTION	QTY
BOOM ASSEMBLY W/ ELEMENT CLAMPS & GUY MOUNTS	1
ELEMENT WRAP BAG	
REFLECTOR HALF ASSEMBLY,	8
DRIVEN ELEMENT HALF ASSEMBLY,	8
D1 ELEMENT HALF ASSEMBLY,	8
D2 ELEMENT HALF ASSEMBLY,	8
ELEMENT SLEEVE, (2.0 RC) .875 X .058 X 30” (M2AEP0015)	4
ELEMENT SLEEVE, (2.5 RC) .875 X .058 X 30” (M2AEP0016)	2
DRIVEN ELEMENT COMPONENTS	
INSULATOR, .875 X 12.75 (M2AFG0031)	2
DISC INSULATORS, .875 (M2ADI0040)	4
HAIR PIN TUBE, 3/8 X .049 X 21” (M2ADP0580)	4
3/8 CLAMP BLOCK,(M2AMC0261)	8
HOSE CLAMP W HOLE #40	2
HAIR PIN STAND OFF 3/8 X 1” (M2ARS0010)	2
HOSE CLAMP #40	2
HF SHORTING BAR, (M2ASB0262)	2
BALUN 1:1 5 KW, (SABL0450)	2
BALUN MOUNT PLATE, (M2APT00590	2
BALUN STRAP, (M2ABP0011)	4
(BOOM GUY SUPPORT MOUNTING)	
PHILLYSTRAN, HPTG-1200 X 25’	4
WIRE CLIP, .125 GALV	16
THIMBLE, 3/16 ZINC	8
EYE BOLT, 5/16 X 3 LAG SS	4
HARDWARE BAG#1	
BOLT, 1/4-20 X 2.25” SS	4
BOLT, 1/4-20 X 2.0” SS	2
BOLT, 1/4-20 X 1.750” SS	16
BOLT, 1/4-20 X 0.50 SS	6
BOLT, 1/4-20 X 0.375 SS	4
LOCK NUT, 1/4-20 SS	22
NUT, 1/4-20 SS	4
SET SCREW, 1/4-20 X .250 SS	4
LOCK WASHER, 1/4 SS	14
ALLEN WRENCH, 1/8	1

FG30XP-8 BOOM / CLAMP ASSEMBLY

ITEM NO.	PART NUMBER	DESCRIPTION	QTY.
1	M2ABS30-4MIT-4	BOOM SECTION #1	1
2	M2ABS30-4MIT-2	BOOM SECTION #3	1
3	M2ABS30-4MIT-1	BOOM SECTION #2	1
4	M2AEC0200	RING CLAMP	4
5	M2AEC0220	RING CLAMP	4
6	M2AMC0130.A	CRADLE, 2.0" DIAMETER TUBE, STANDARD	4
7	M2APT0060	GUY SUPPORT PLATE	2
8	HNT02500100	LOCKNUT, 1/4-20, SS	12
9	HBT02500300	BOLT, 1/4-20 X 1-1/4",HEX HD,SS	8
10	HBT02500600	BOLT, 1/4-20 X 2.75", HEX HEAD, SS	2
11	HBT02500700	BLT,1/4-20X3.25,HEX HD,SS	2
12	HBT03120445	BLT,5/15-18X3.25,HEX HD,SS	4
13	HNT03120100	LOCKNUT, 5/16-18, SS	4

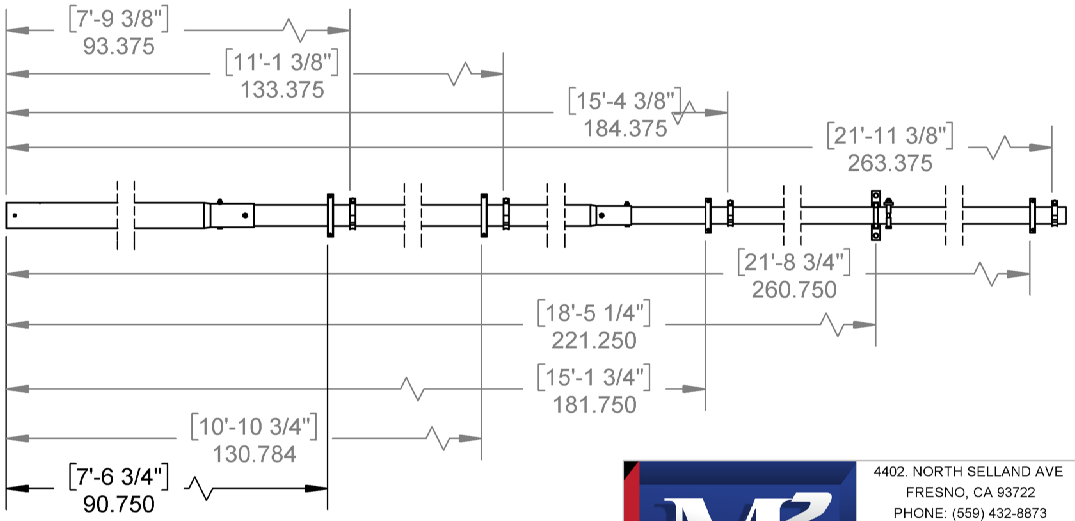

M2 ANTENNA SYSTEMS, INC.

4402. NORTH SELLAND AVE
FRESNO, CA 93722
PHONE: (559) 432-8873

PART No: 30XP8

REV A

DESCRIPTION: BOOM WITH CLAMPS AND HARDWARE

MATERIAL:

FINISH:

DIMENSIONS ARE IN INCHES UNLESS SPECIFIED OTHERWISE

TOLERANCES:
FRACTIONAL ± .030"
ANGULAR ± .5°
TWO PLACE DECIMAL ± .015"
THREE PLACE DECIMAL ± .005"

PROPRIETARY AND CONFIDENTIAL
THE INFORMATION CONTAINED IN THIS DRAWING IS THE SOLE PROPERTY OF M2 ANTENNA SYS. INC. ANY REPRODUCTION IN PART OR AS A WHOLE WITHOUT THE WRITTEN PERMISSION OF M2 ANTENNA SYS. INC. IS PROHIBITED

DO NOT SCALE DRAWING | WEIGHT: 27.88 | SHEET 3 OF 3

FG30XP-8 REFLECTOR ASSEMBLY (HALF)

ITEM NO.	PART NUMBER	DESCRIPTION	HARDWARE/QTY.
1	M2AEP30-4MIT-1	M2AEP30-4MIT-1	1
2	M2AEP30-4MIT-2	M2AEP30-4MIT-2	1
3	SAEL30-4MIT	REFLECTOR ELEMENT	1
4	HNT00830150	LOCK NUT, 8-32, SS	4
5	HSC00830600	SCRW,8-32X1.0,PHL PAN HD,SS	2
6	HSC00830700	SCREW, 8-32 X 1.250", PHILLIPS PAN HEAD, SS	2

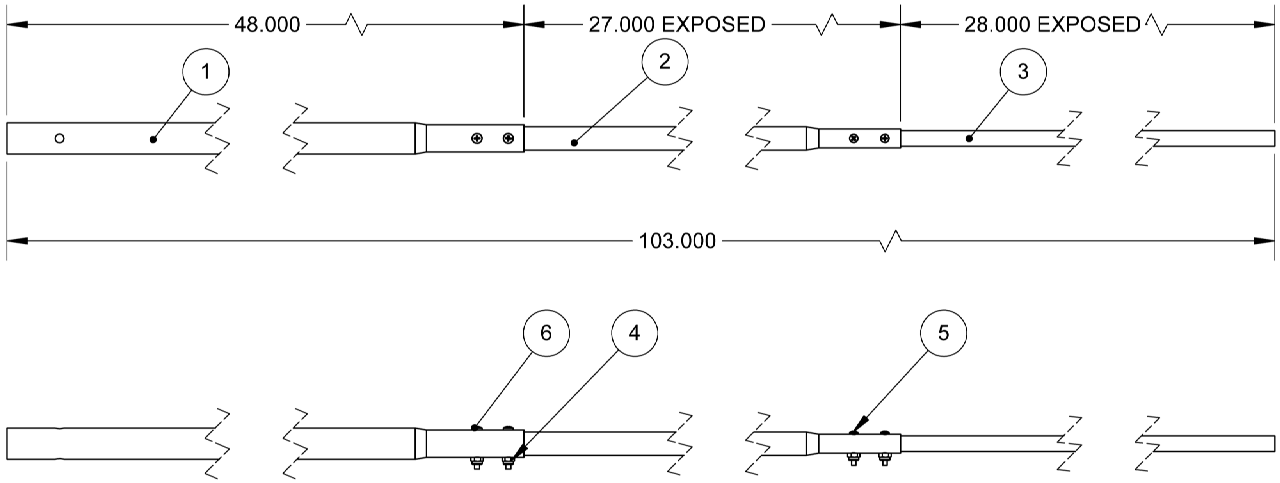

.5625 GAP COMPENSATED FROM ELEMENT TIP

REVISIONS

REV.	ECO #	DESCRIPTION	DRAWN BY	APRVD BY	DATE

M2 ANTENNA SYSTEMS, INC.

4402. NORTH SELLAND AVE
FRESNO, CA 93722
PHONE: (559) 432-8873

PART No: 30-4 REFLECTOR

REV A

DESCRIPTION: 30-4 REFLECTOR ELEMENT HALF

MATERIAL:

FINISH:

DIMENSIONS ARE IN INCHES UNLESS SPECIFIED OTHERWISE

TOLERANCES:
FRACTIONAL ± .030"
ANGULAR ± .5°
TWO PLACE DECIMAL ± .015"
THREE PLACE DECIMAL ± .005"

PROPRIETARY AND CONFIDENTIAL
THE INFORMATION CONTAINED IN THIS DRAWING IS THE SOLE PROPERTY OF M2 ANTENNA SYS. INC. ANY REPRODUCTION IN PART OR AS A WHOLE WITHOUT THE WRITTEN PERMISSION OF M2 ANTENNA SYS. INC. IS PROHIBITED

DO NOT SCALE DRAWING | WEIGHT: 1.36 | SHEET 2 OF 2

FG30XP-8 DRIVEN ELEMENT ASSEMBLY (HALF)

ITEM NO.	PART NUMBER	DESCRIPTION	HARDWARE/QTY.
1	M2AEP30-4MIT-1	M2AEP30-4MIT-1	1
2	M2AEP30-4MIT-2	M2AEP30-4MIT-2	1
3	SAEL30-4MIT	DRIVEN ELEMENT	1
4	HNT00830150	LOCK NUT, 8-32, SS	4
5	HSC00830600	SCRW,8-32X1.0,PHL PAN HD,SS	2
6	HSC00830700	SCREW, 8-32 X 1.250", PHILLIPS PAN HEAD, SS	2

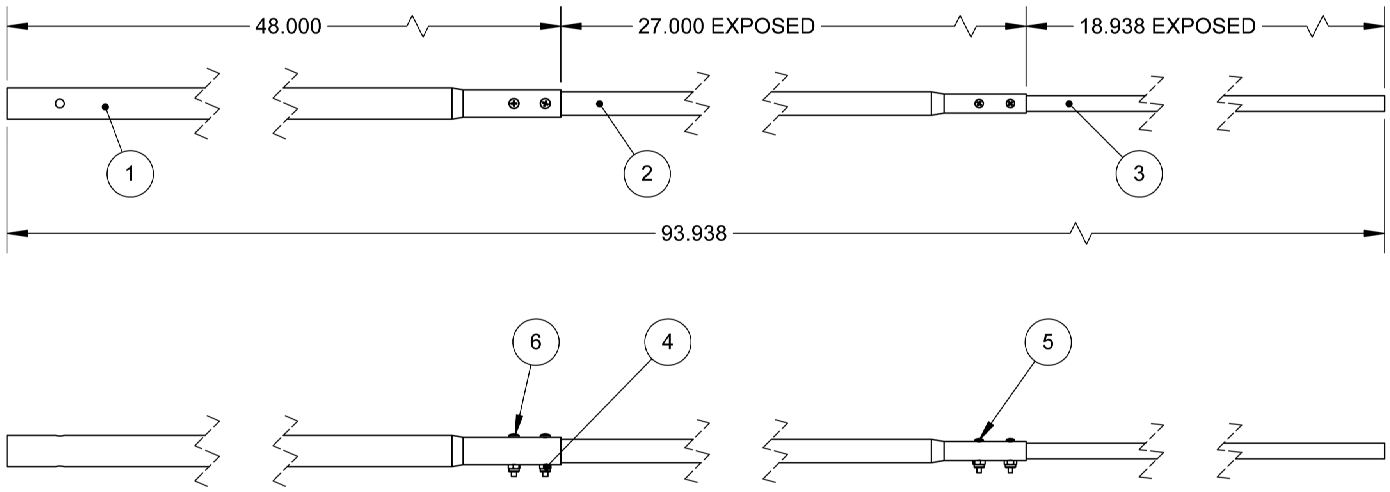

REVISIONS

REV.	ECO #	DESCRIPTION	DRAWN BY	APRVD BY	DATE

M2 ANTENNA SYSTEMS, INC.

DIMENSIONS ARE IN INCHES UNLESS SPECIFIED OTHERWISE

TOLERANCES:
FRACTIONAL ± .030"
ANGULAR ± .5°
TWO PLACE DECIMAL ± .015"
THREE PLACE DECIMAL ± .005"

4402. NORTH SELLAND AVE
FRESNO, CA 93722
PHONE: (559) 432-8873

PART No: 30-4| DRIVEN ELEMENT

REV: A

DESCRIPTION: 30-4 DRIVEN ELEMENT HALF

MATERIAL:

FINISH:

PROPRIETARY AND CONFIDENTIAL
THE INFORMATION CONTAINED IN THIS DRAWING IS THE SOLE PROPERTY OF M2 ANTENNA SYS. INC. ANY REPRODUCTION IN PART OR AS A WHOLE WITHOUT THE WRITTEN PERMISSION OF M2 ANTENNA SYS. INC. IS PROHIBITED

DO NOT SCALE DRAWING | WEIGHT: 1.30 | SHEET 2 OF 2

FG30XP-8 DIRECTOR-1 ASSEMBLY (HALF)

ITEM NO.	PART NUMBER	DESCRIPTION	HARDWARE/QTY.
1	M2AEP30-4MIT-1	M2AEP30-4MIT-1	1
2	M2AEP30-4MIT-2	M2AEP30-4MIT-2	1
3	SAEL30-4MIT	DIRECTOR # 1 ELEMENT	1
4	HNT00830150	LOCK NUT, 8-32, SS	4
5	HSC00830600	SCRW,8-32X1.0,PHL PAN HD,SS	2
6	HSC00830700	SCREW, 8-32 X 1.250", PHILLIPS PAN HEAD, SS	2

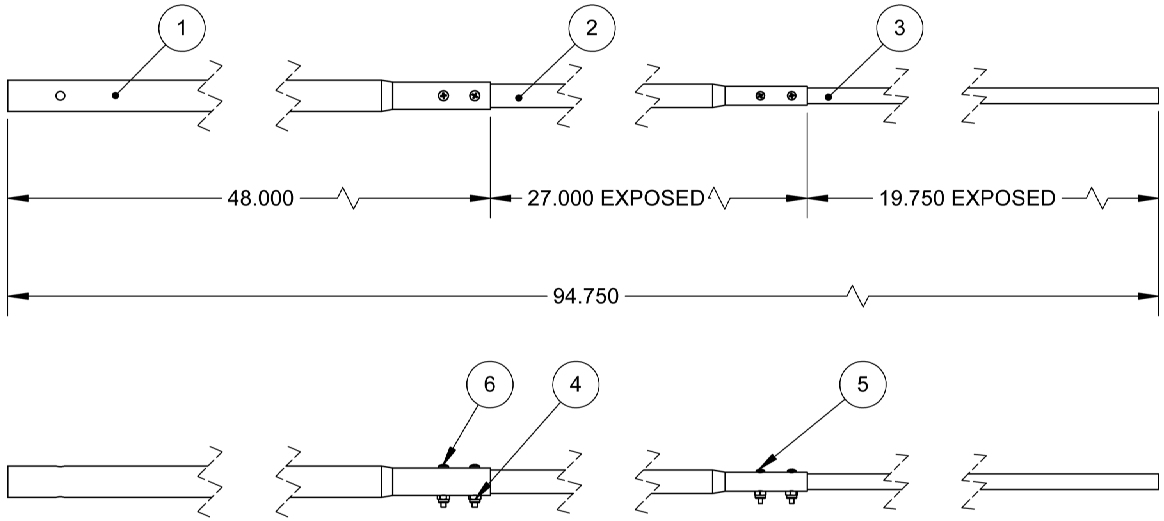

REVISIONS

REV.	ECO #	DESCRIPTION	DRAWN BY	APRVD BY	DATE

M2 ANTENNA SYSTEMS, INC.

DIMENSIONS ARE IN INCHES UNLESS SPECIFIED OTHERWISE

TOLERANCES:
FRACTIONAL ± .030"
ANGULAR ± .5°
TWO PLACE DECIMAL ± .015"
THREE PLACE DECIMAL ± .005"

4402. NORTH SELLAND AVE
FRESNO, CA 93722
PHONE: (559) 432-8873

PART No: 30-4 -DIRECTOR-1

REV A

DESCRIPTION: 30-4 DIRECTOR 1 ELEMENT HALF

MATERIAL:

FINISH:

PROPRIETARY AND CONFIDENTIAL
THE INFORMATION CONTAINED IN THIS DRAWING IS THE SOLE PROPERTY OF M2 ANTENNA SYS. INC. ANY REPRODUCTION IN PART OR AS A WHOLE WITHOUT THE WRITTEN PERMISSION OF M2 ANTENNA SYS. INC. IS PROHIBITED

DO NOT SCALE DRAWING | WEIGHT: 1.31 | SHEET 2 OF 2

FG30XP-8 DIRECTOR-2 ASSEMBLY (HALF)

ITEM NO.	PART NUMBER	DESCRIPTION	HARDWARE/ QTY.
1	M2AEP30-4MIT-1	M2AEP30-4MIT-1	1
2	M2AEP30-4MIT-2	M2AEP30-4MIT-2	1
3	SAEL30-4MIT	DIRECTOR #2 ELEMENT	1
4	HNT00830150	LOCK NUT, 8-32, SS	4
5	HSC00830600	SCRW,8-32X1.0,PHL PAN HD,SS	2
6	HSC00830700	SCREW, 8-32 X 1.250", PHILLIPS PAN HEAD, SS	2

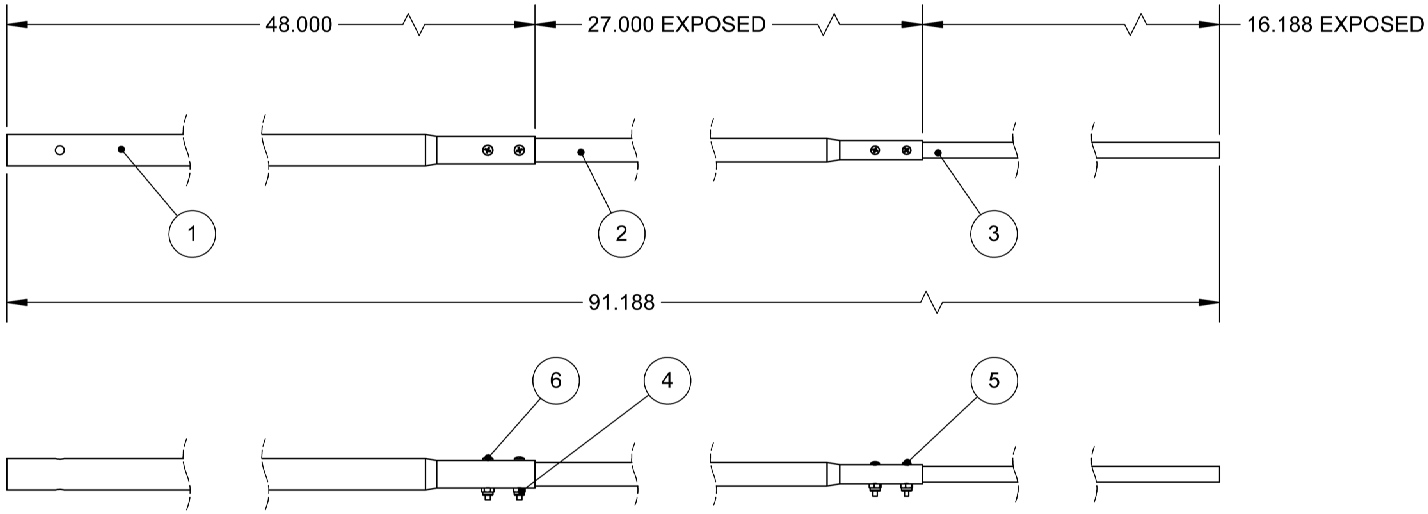

REVISIONS

REV.	ECO #	DESCRIPTION	DRAWN BY	APRVD BY	DATE

M2 ANTENNA SYSTEMS, INC.

DIMENSIONS ARE IN INCHES UNLESS SPECIFIED OTHERWISE

TOLERANCES:
FRACTIONAL ± .030"
ANGULAR ± .5°
TWO PLACE DECIMAL ± .015"
THREE PLACE DECIMAL ± .005"

4402. NORTH SELLAND AVE
FRESNO, CA 93722
PHONE: (559) 432-8873

PART No: 30-4 -DIRECTOR-2

REV A

DESCRIPTION: 30-4 DIRECTOR-2

MATERIAL:

FINISH:

PROPRIETARY AND CONFIDENTIAL
THE INFORMATION CONTAINED IN THIS DRAWING IS THE SOLE PROPERTY OF M2 ANTENNA SYS. INC. ANY REPRODUCTION IN PART OR AS A WHOLE WITHOUT THE WRITTEN PERMISSION OF M2 ANTENNA SYS. INC. IS PROHIBITED

DO NOT SCALE DRAWING | WEIGHT: 1.28 | SHEET 2 OF 2

ANTENNA STAND DETAIL

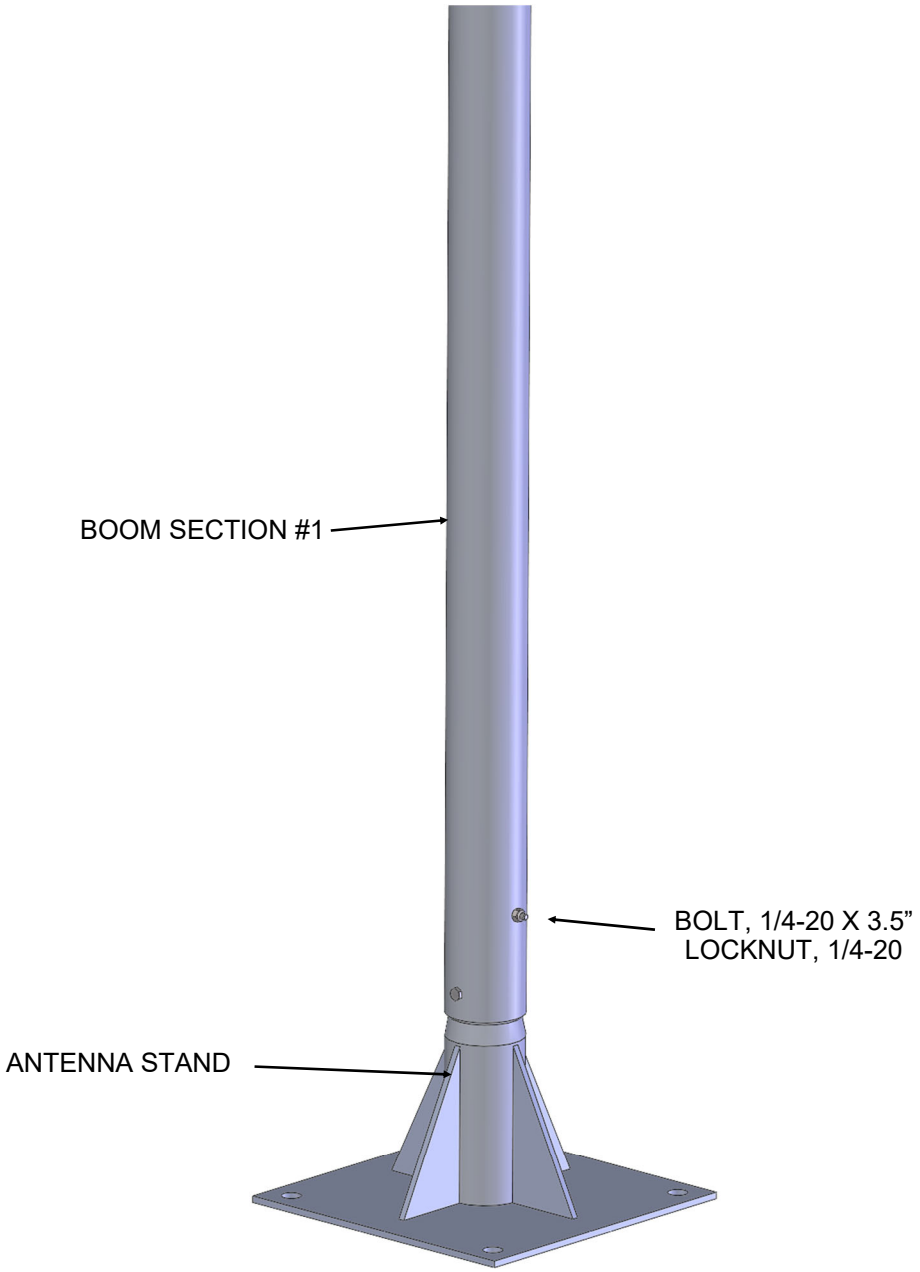

REFLECTOR MOUNTING DETAIL

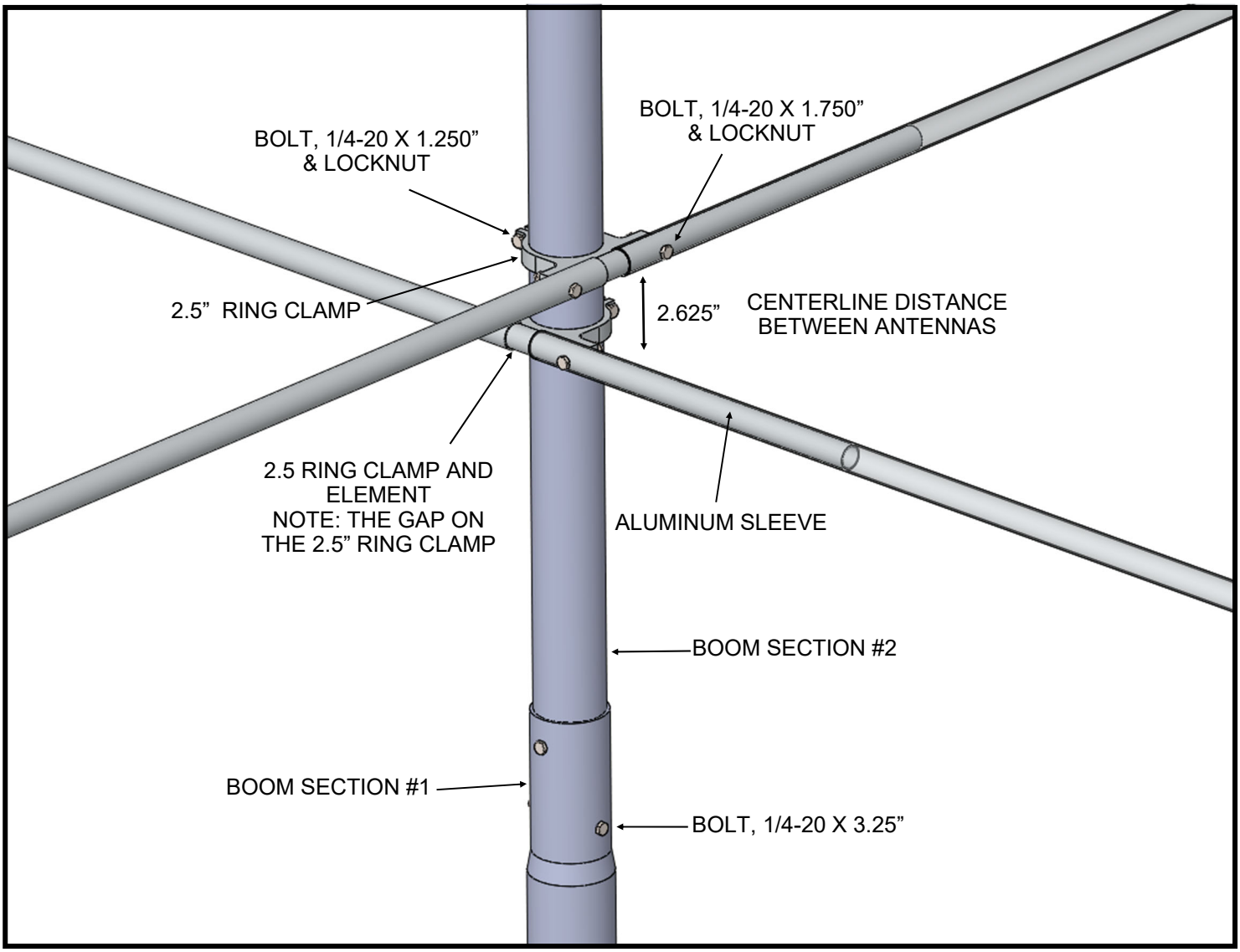

BALUN ASSEMBLY DETAIL

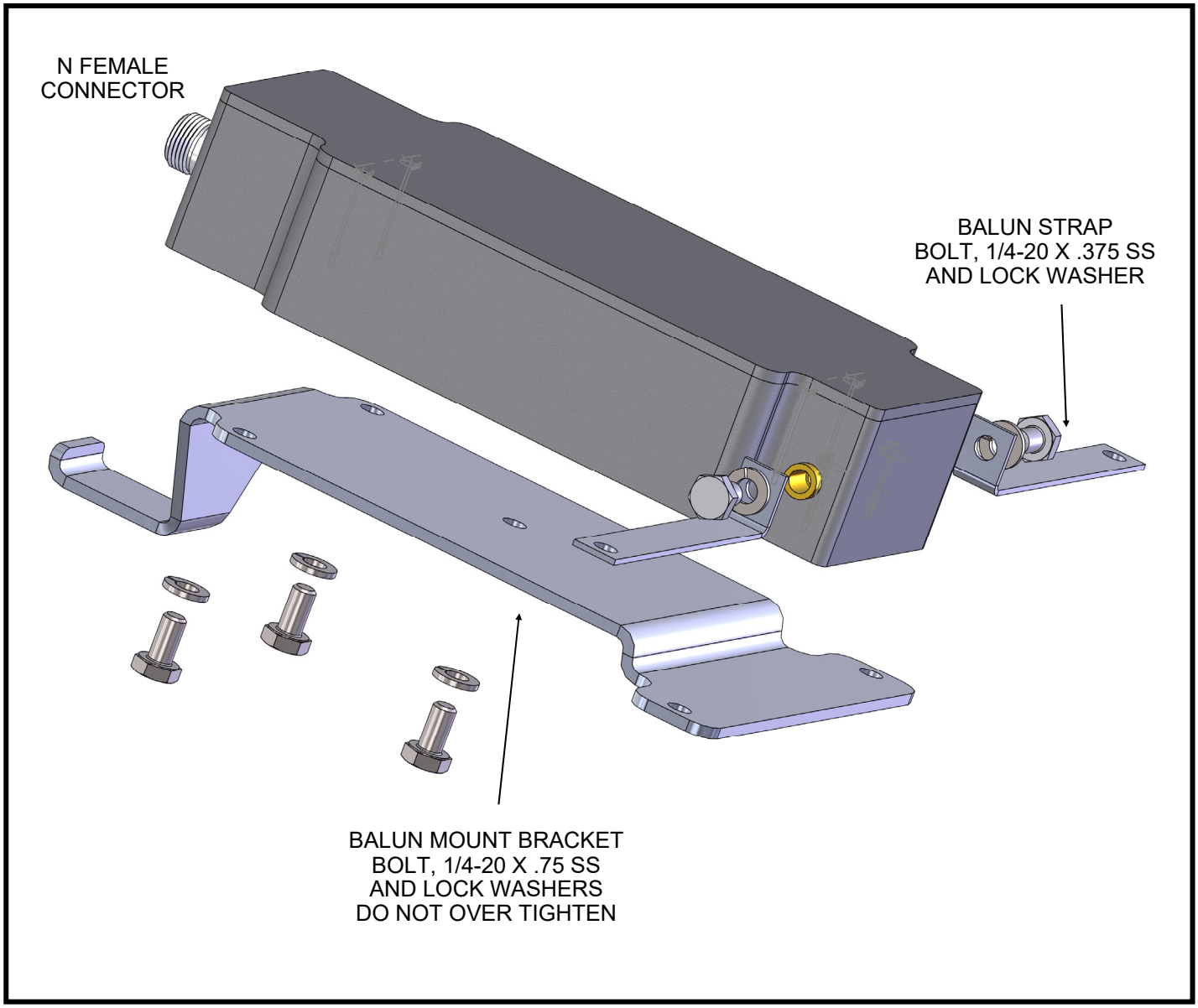

DRIVEN ELEMENT ASSEMBLY

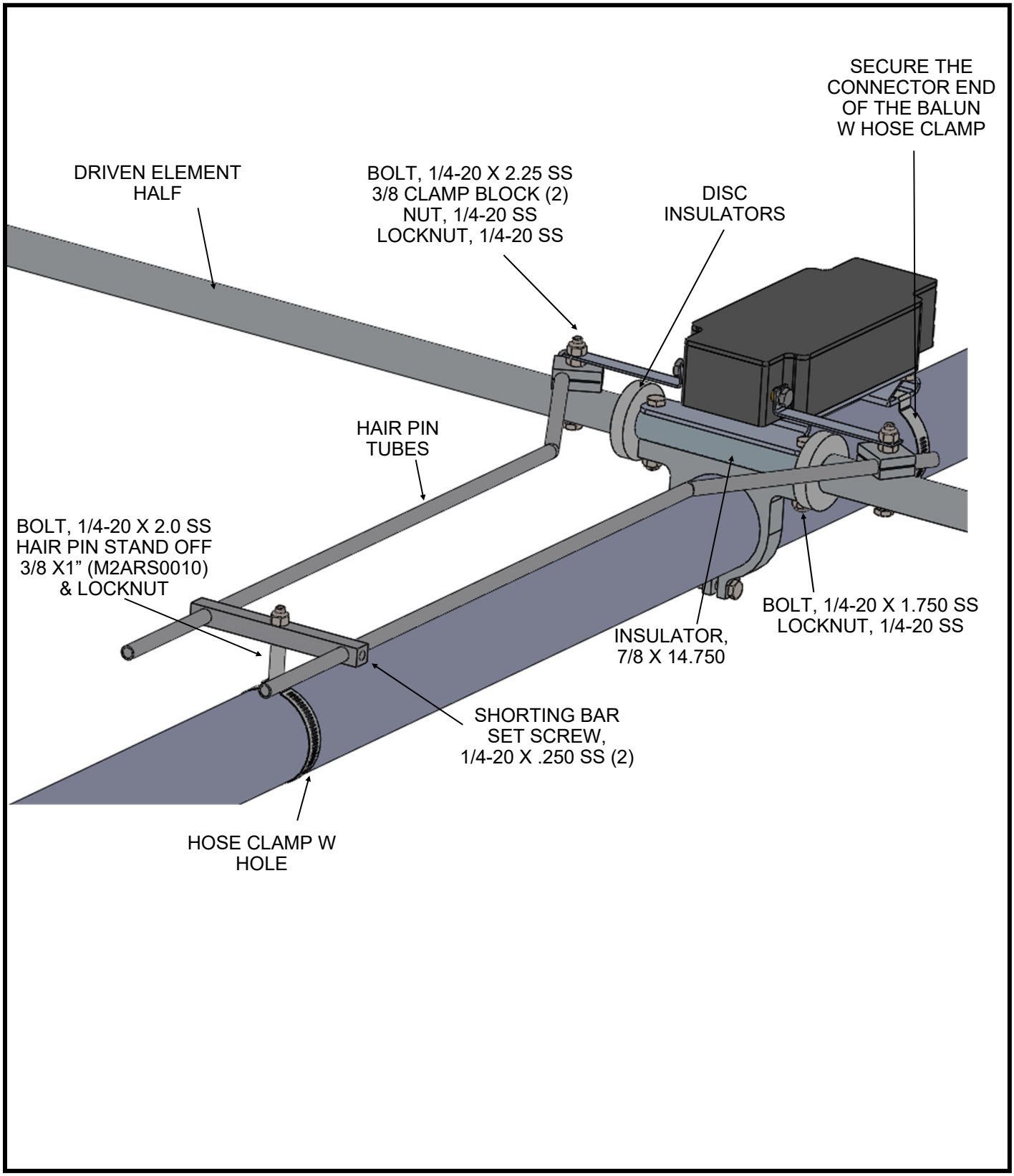

DRIVEN ELEMENT ASSEMBLY

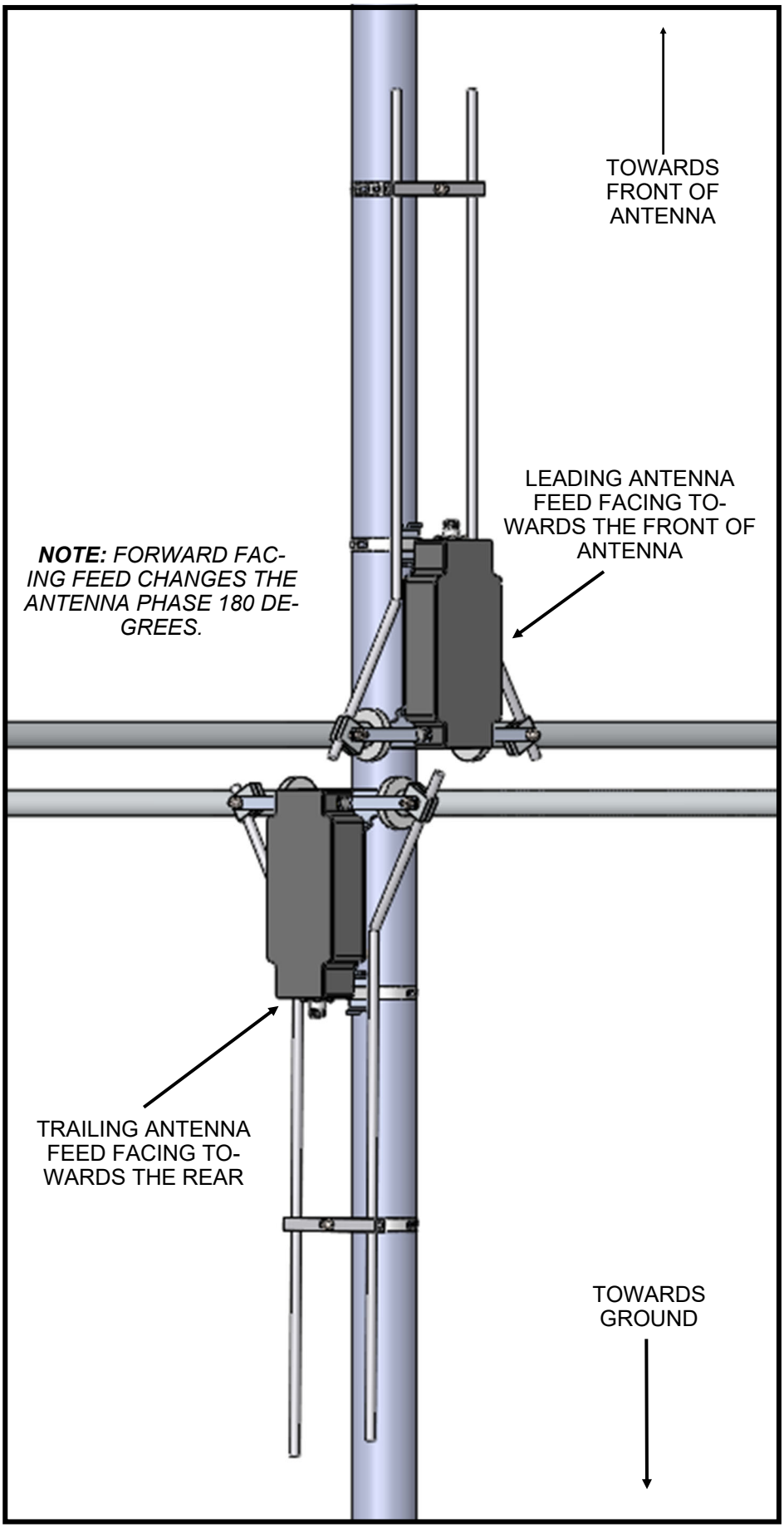

DIRECTOR MOUNTING DETAIL

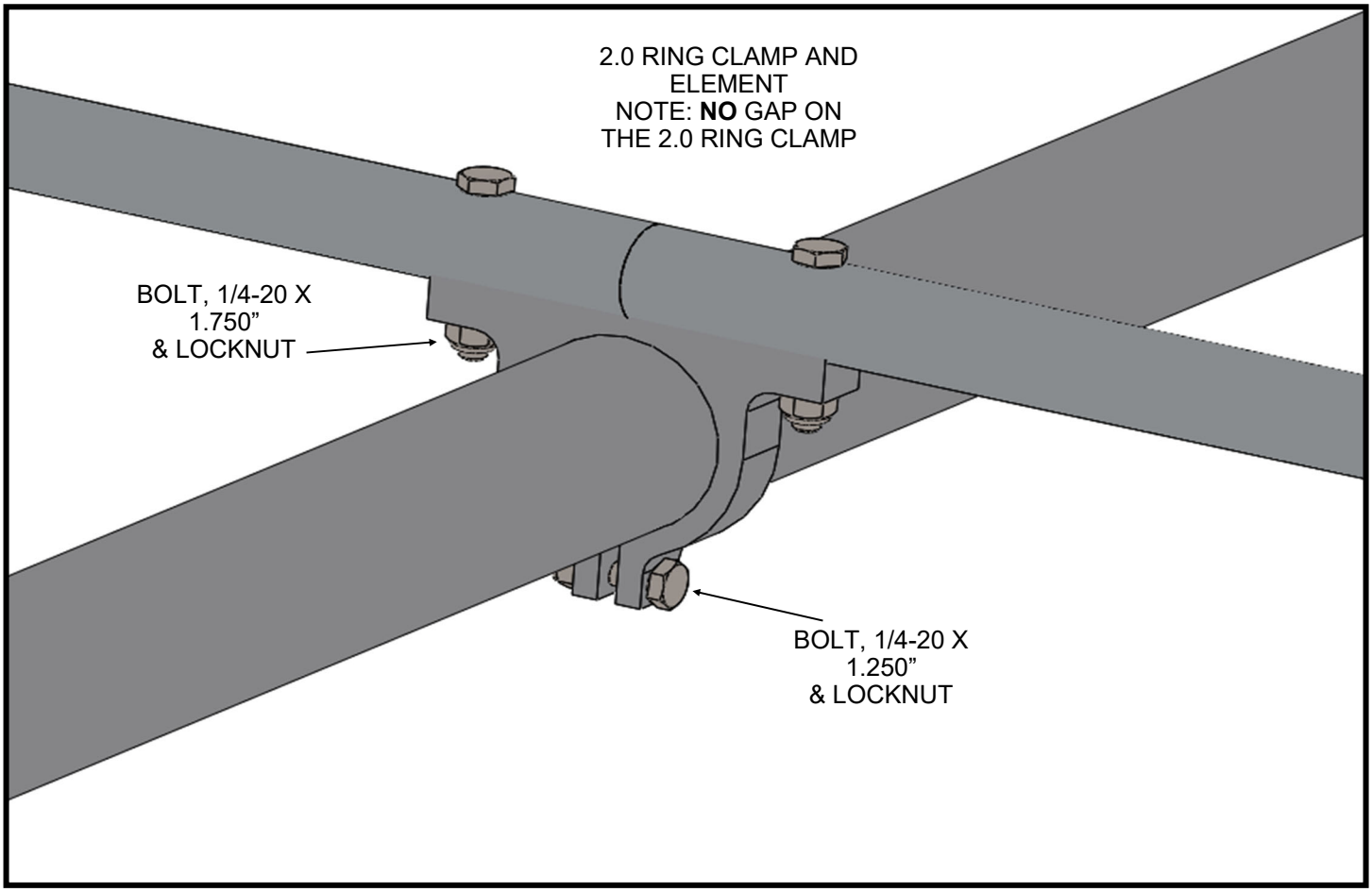

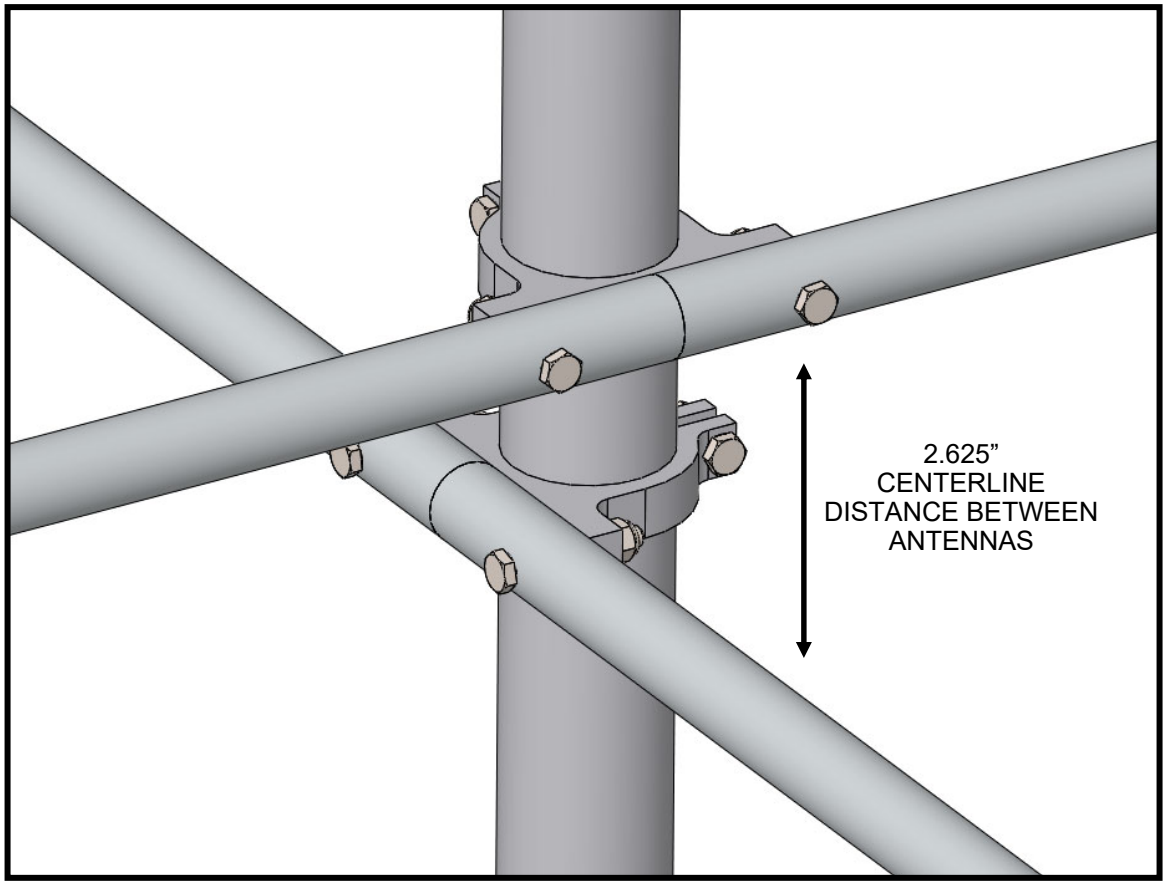

UPPER GUY WIRE DETAIL

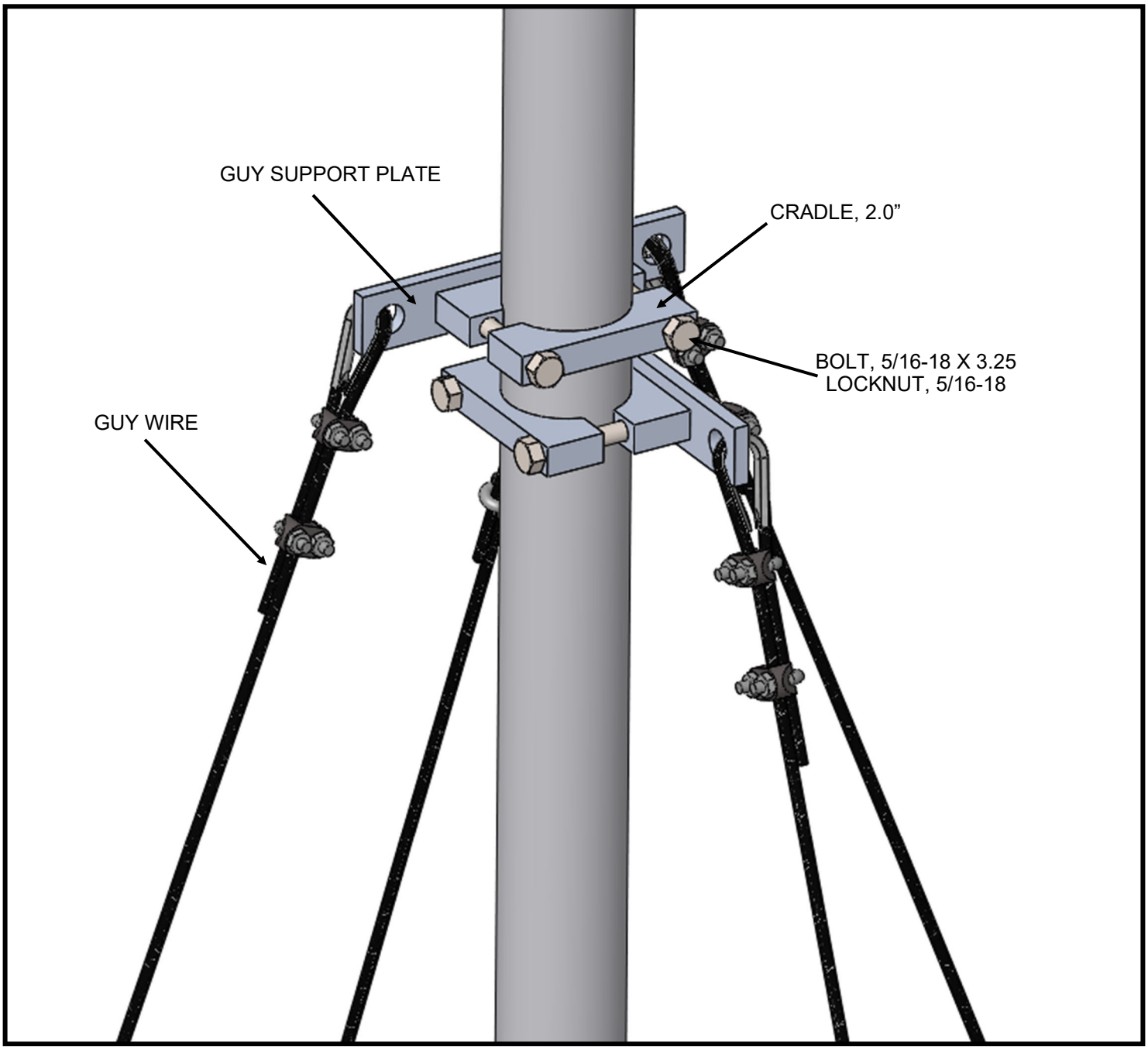

FG30XP-8 BOM COMPLETE

DESCRIPTION	QTY
BOOM SECTION #1, 3 X .125 X 82.00" (M2ABS30-4MIT-4)	1
BOOM SECTION #2, 2.5 X .125 X 96"(M2ABS30-4MIT-1)	1
BOOM SECTION #3, 2.0 X .125 X 96" (M2ABS30-4MIT-2)	1
ELE SEC,E1, 1.0 X .058 X 48" (M2AEP30-4MIT-1)	16
ELE SEC,E2, 0.75 X .049 X 30" (M2AEP30-MIT-2)	16
ELE TIP,REF, 0.5 X .049 X 31.00" (M2AEP30-4MIT-3)	16
ELE TIP,DE, 0.5 X .049 X 21.937" (M2AEP30-4MIT-4)	4
ELE TIP,D1, 0.5 X .049 X 22.750" (M2AEP30-4MIT-5)	4
ELE TIP,D2, 0.5 X .049 X 19.188" (M2AEP30-4MIT-6)	4
ELE SLEEVE(2.0 RC), 0.875 X .058 X 30" (M2AEP0015)	4
ELE SLEEVE (2.5 RC), 0.875 X .058 X 30" (M2AEP0016)	2
RING CLAMP, 2.0" (M2AEC0200)	4
RING CLAMP, 2.5 (M2AEC0220)	4
CRADLE, 2" STD (M2AMC0130)	4
GUY SUPPORT PLATE, M2APT0060	2
PHILLYSTRAN, HPTG-1200 X 25"	4
EYE BOLT, 5/16 X 3 LAG SS	4
WIRE CLIP, .125 GALV	8
THIMBLE, 3/16 ZINC	4
HAIR PIN TUBES, 3/8X .049 X 27" (M2ADP0591)	4
3/8 CLAMP BLOCK, (M2AMC0261)	8
HOSE CLAMP W/ HOLE, #40	2
HF SHORTING BAR, (M2ASB0262)	2
INSULATOR, .875 X 12.75 (M2AFG0031)	2
DISC INSULATOR, .875 (M2ADI0040)	4
HAIR PIN STAND OFF, (M2ARS0010)	2
BALUN, 1:1 5 KW, (SABL0450)	2
HOSE CLAMP #40	2
BALUN MOUNT PLATE, (M2APT0059)	2
BALUN STRAP, (M2ABP0011)	4
ANTENNA BASE, (SABM30XP8MIT)	1

HARDWARE

BOLT, 5/16-18 X 3.25" SS	8
LOCKNUT, 5/16-18 SS	8
BOLT, 1/4-20 X 3.50 SS	2
BOLT, 1/4-20 X 3.25 SS	2
BOLT, 1/4-20 X 2.75 SS	2
BOLT, 1/4-20 X 2.25 SS	4
BOLT, 1/4-20 X 2.0 SS	2
BOLT, 1/4-20 X 1.75 SS	16
BOLT, 1/4-20 X 1.25 SS	16
BOLT, 1/4-20 X 0.50 SS	6
BOLT, 1/4-20 X 0.375 SS	4
SET SCREW, 1/4-20 X .25	4
NUT, 1/4-20 SS	4
LOCK NUT, 1/4-20 SS	42
LOCK WASHER, 1/4-20 SS	10
SCREW, 8-32 X 1.25 SS	32
SCREW, 8-32 X 1.0 SS	32
LOCK NUT, 8-32 SS	64
ALLEN WRENCH, 1/8	1

FG30XP-8 HORIZONTAL OR UPPER ANTENNA RETURN LOSS

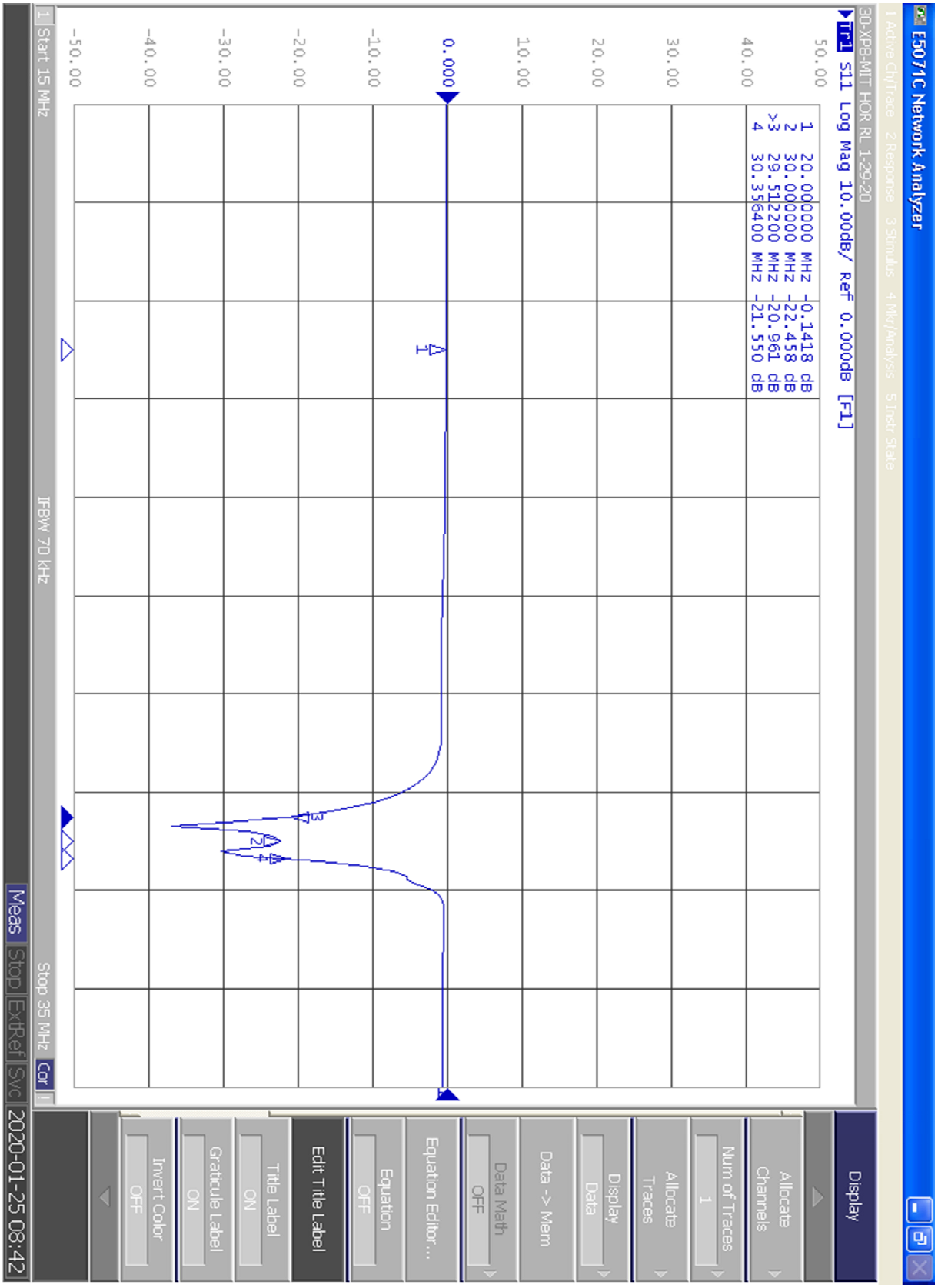

FG30XP-8 VERTICAL OR LOWER ANTENNA RETURN LOSS

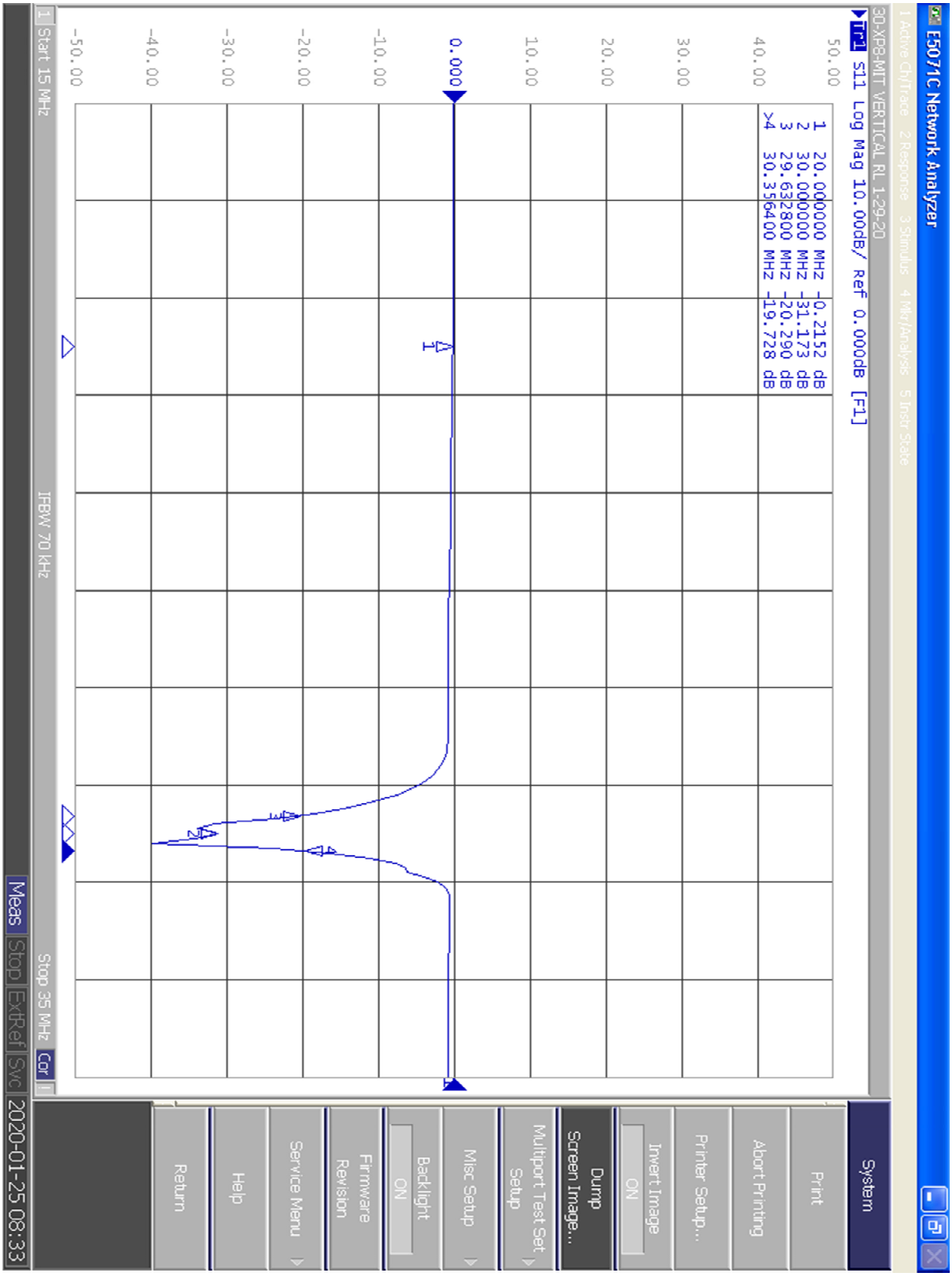
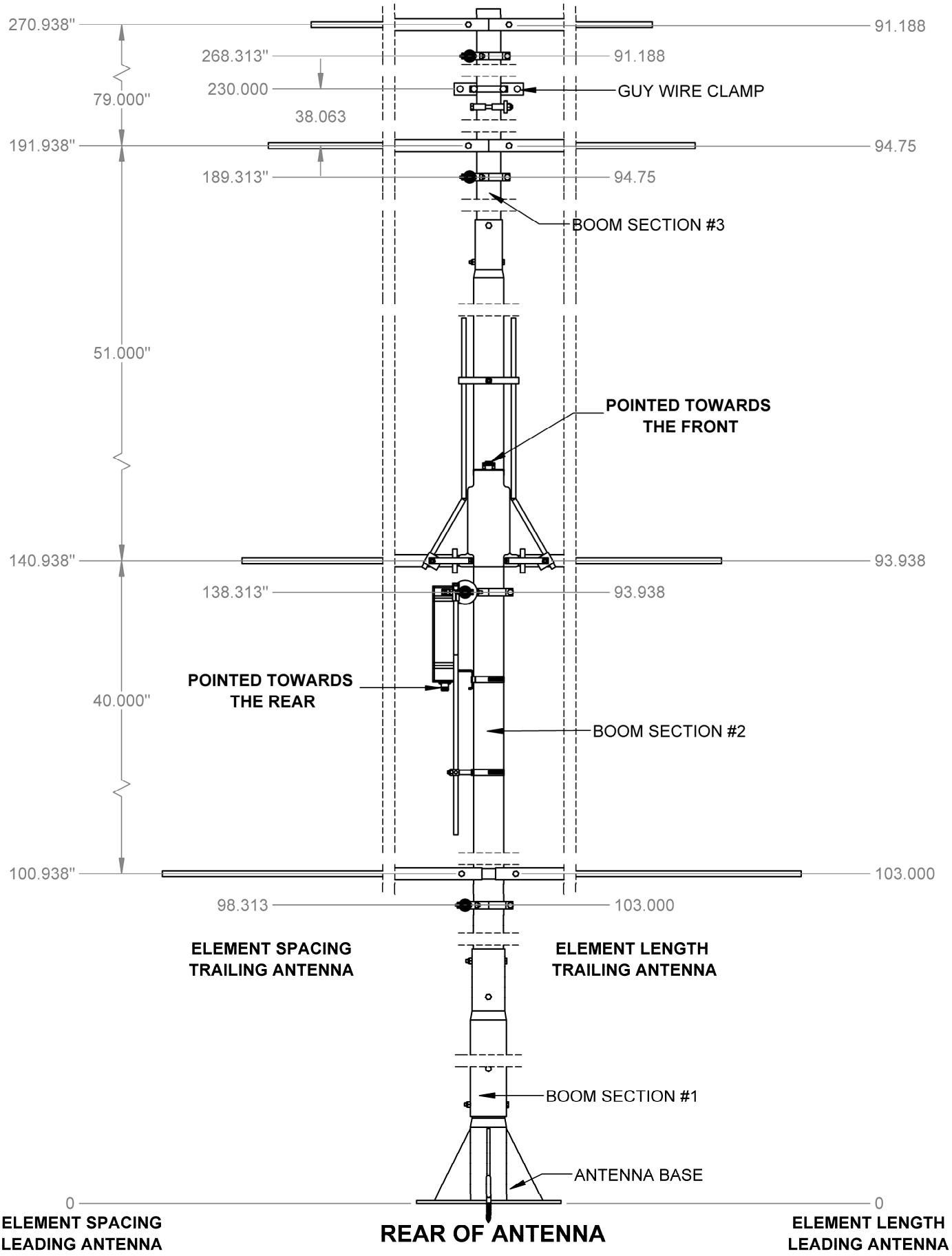
FG30XP-8 DIMENSION SHEET